CATALOG NO.
J-49
Weatherly 920

Walker Jacks

The Complete Line

WALKER LEADS IN JACKS

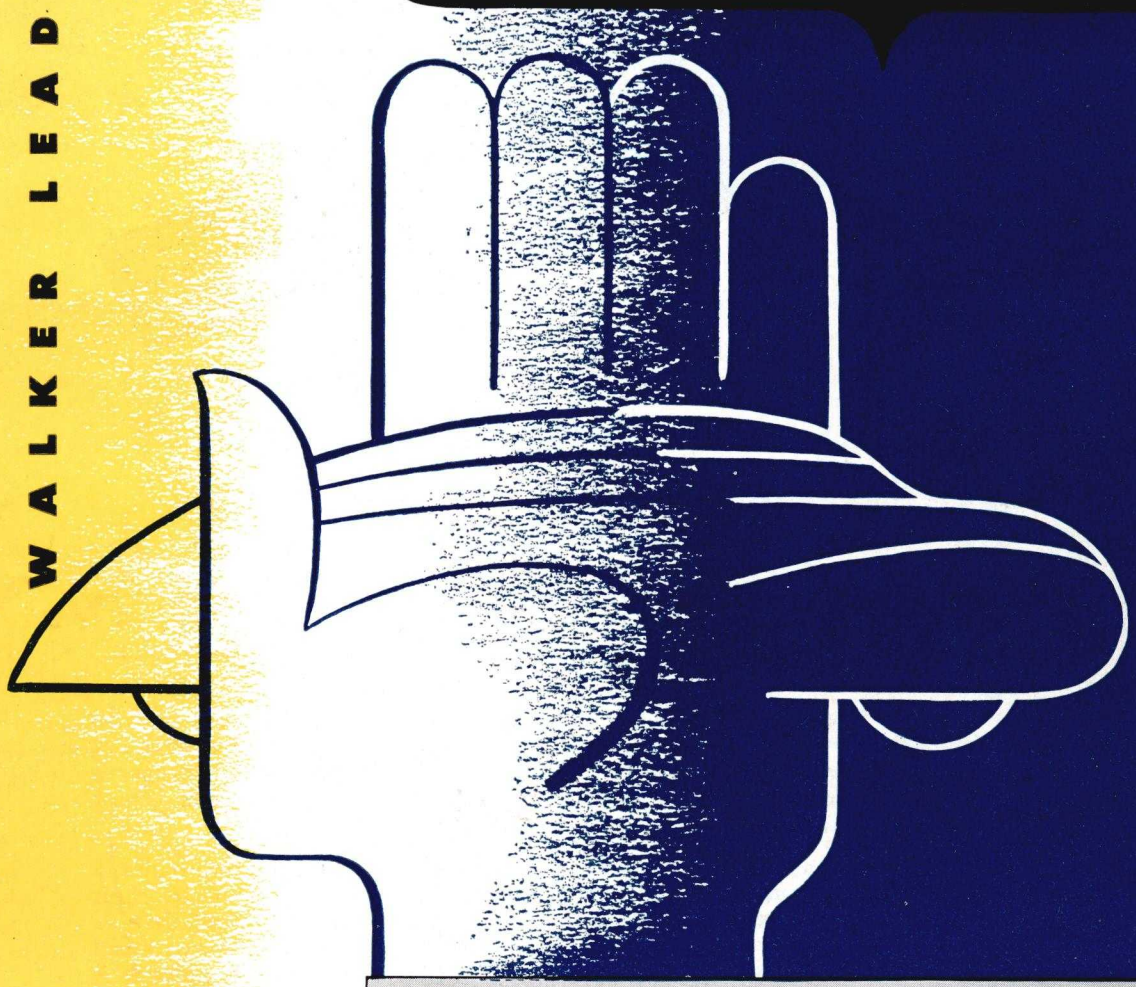

Featuring

- THE NEW DELUXE GREYHOUNDS AND WHIPPETS
- THE NEW UTILITY LIFT-A-CAR "BLUE BOY II"
- THE NEW DELUXE "SERIES 900" HYDRAULICS

AND MANY OTHER OUTSTANDING ENGINEERING ACHIEVEMENTS.

Introducing

THE NEW WALKER "GOLD SEAL" HYDRAULIC POWER UNIT

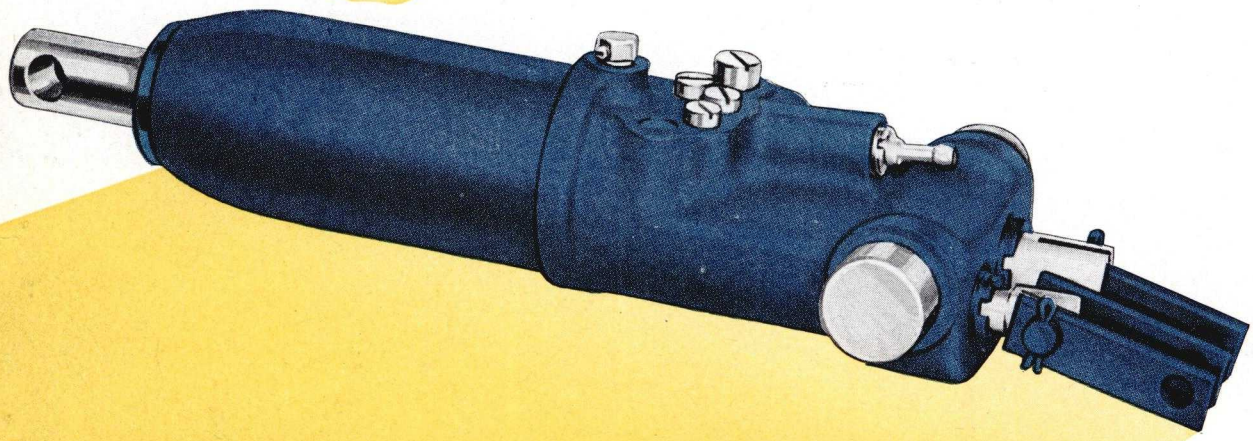

THE FINEST HYDRAULIC POWER MECHANISM FOR SERVICE JACKS EVER DEVELOPED.

A TRIUMPH OF ENGINEERING BY THE WORLD'S LEADING JACK MAKER.

Believing that the true value of any service jack is determined by the performance of its hydraulic power unit, Walker engineers focused their attention upon the task of refining and developing to still higher standards of efficiency . . . the already famous Walker "Greyhound" power mechanism.

They started over from the beginning . . . examining and re-examining—checking and re-analyzing those things which are *primary* in proper jack operation . . . the power cylinder . . . the tolerance of reciprocating parts . . . the controls . . . the protective features which preserve fine performance . . . which add longer trouble-free life . . . greater safety . . . smoother, easier lifting . . . and more positive lowering.

They "researched" through the entire field of bearings and surfaces . . . through cup leathers and seals . . . through stresses and strains and materials with their minds open—with their curiosity and imagination prodding deeper and deeper for the perfect answer. And then in ultimate achievement created the new Walker "Gold Seal" Hydraulic Power Unit—the finest hydraulic power mechanism for service jacks, we believe, that has ever been developed. A unit so progressive . . . so advanced that it towers in contrast with those that have gone before. Evolutionary so that previous accomplishments may be added to—instead of cast off—but still revolutionary enough to be new in its final result.

Here is a truly great power unit for fine hydraulic jacks . . . the accumulated experience of well over a quarter of a century of jack building—another contribution to better lifting equipment by Walker—the new "Gold Seal" Hydraulic Power Unit.

THE HEART OF THE SERVICE JACK IS THE POWER UNIT

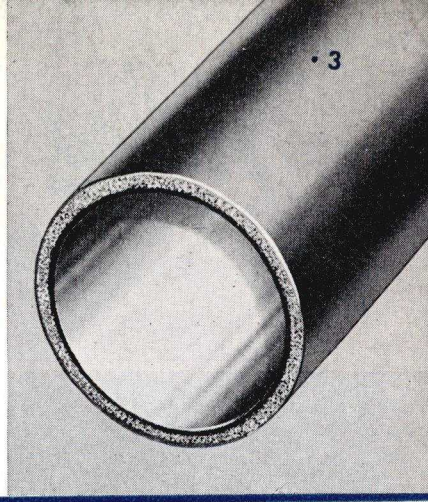

REVOLUTIONARY NEW "I.S.D." POWER CYLINDER

Remember I.S.D.—it means *increased surface density*—a revolutionary new finish for the inside surface of the seamless carbon steel power cylinder in the new "Gold Seal" unit. It is not a polish . . . not a burnish, but an actual scientific densification of the surface structure of the metal to provide a "micro-smooth" finish with greater wear resistance and a more positive seal between the cylinder wall and the cup leather. The Walker "I.S.D. Process" is a most important contribution to longer jack life . . . and smoother, trouble-free performance.

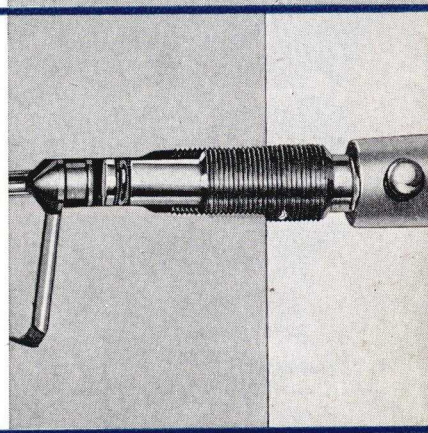

NEW SELF-CENTERING "FINGER-TIP" CONTROL

Greater ease of control is engineered into the new "Gold Seal" power unit by an ingenious new self-centering control mechanism which prevents valve seat wear and eccentric binding. This new "finger-tip" control is leak-proof and trouble-free. It permits positive closing without undue effort —and provides a more accurate control of lowering speed. Here is a refinement . . . a forward step in service jack performance that considers both the operator and the load . . . the first in terms of ease and comfort—the second in terms of safety.

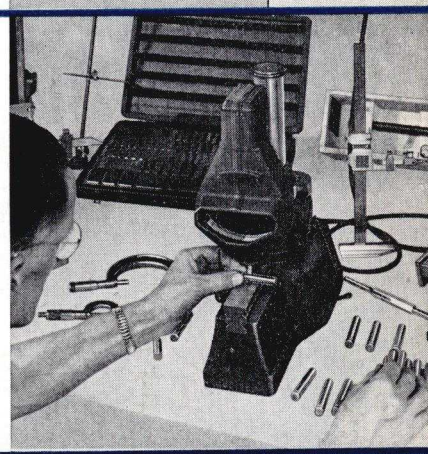

"TOLERANCE .0015" PRECISION GROUND RECIPROCATING PARTS

Greater accuracy and precision are a vital part of the "quality control" for the new "Gold Seal" unit. Internal wear from reciprocating parts which must pass through glands, is reduced to a minimum through precision centerless grinding of these parts to a tolerance of .0015". Balls and ball seats, screws and valves, packings and cup leathers, all receive special attention. In fact, the entire "Gold Seal" unit has been tested and retested under every condition and strain to assure long, safe, trouble-free service.

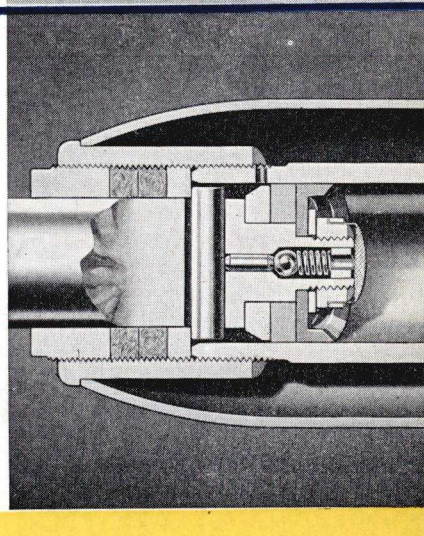

NEW FILTERED "HYDRA-MATIC" RELIEF VALVE

The new Filtered "Hydra-matic" relief valve engineered into the "Gold Seal" power unit is one of the most far-reaching developments in safe, modern hydraulic jack construction. By eliminating the necessity of a pin hole relief it removes the basic cause of cup washer scoring . . . one of the most frequent sources of hydraulic jack failure. This special valve also prevents the building up of excessive oil pressures at maximum height. In the new "Gold Seal" unit the intake port of the "Hydra-matic" is covered with a fine screen to filter out foreign material which might prevent proper operation.

Plus THESE ADDITIONAL WALKER "SHOP-PROVEN" SUPERIORITIES

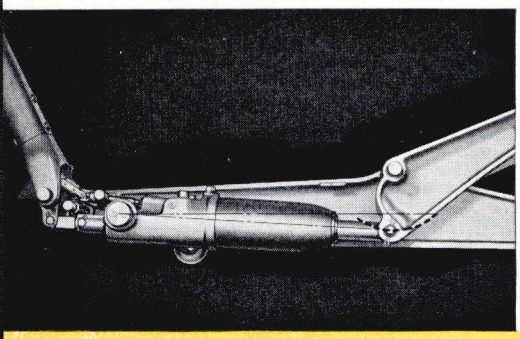

"STRAIGHT-LINE" DRIVE

Exclusively Walker is the "Straight-Line" Drive from the fulcrum of the power unit to the bell crank made possible by Walker developed principle of the "oscillating power unit." This advanced construction eliminates side strains on the power ram which might cause leakage and expensive repairs. It assures positive, dependable power at all lifting positions with no eccentric strains. This "Gold Seal" principle of "Straight Line" Drive makes possible greater efficiency and longer trouble-free performance than any other known method of hydraulic jack power application.

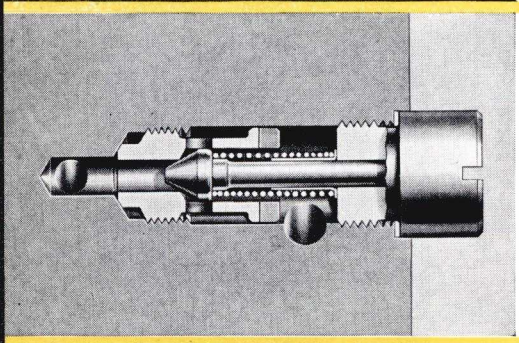

"SILENT SPEED" PUMP

Another of the fine engineering accomplishments for the new "Gold Seal" power unit is the exclusive "Silent Speed" by-pass valve on the booster pump. This advanced design insures dependable, quiet and consistently smooth operation under all conditions. Positive closing action assures constant speed stroke action. The operating stroke is fast, smooth and uniform throughout its entire range.

In the new "Gold Seal" power unit, the "Silent-Speed" pump quickly raises the cap to the load with a minimum of strokes, cutting out in favor of the power pump when the load is actually contacted.

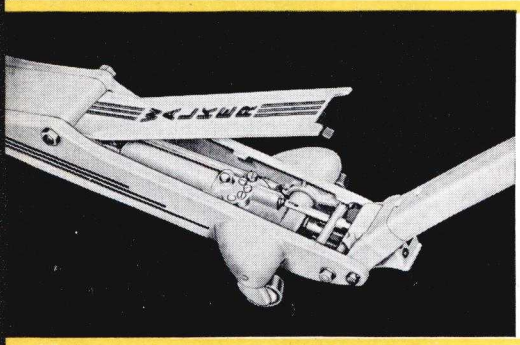

"AIR-BOUND PROOFED" DESIGN

The new Walker "Gold Seal" power unit cannot become air-bound. Troublesome "air pockets" are positively prevented by the location of the oil passages. This thoughtful Walker engineered feature assures fast, smooth, dependable lifting power at all times and prevents lost strokes and faulty performance characteristic of ordinary air-bound jacks.

The new Walker "Gold Seal" power unit has been designed in every detail to make possible the finest combination of speed, low handle effort and dependable, uniform performance over a long period of service.

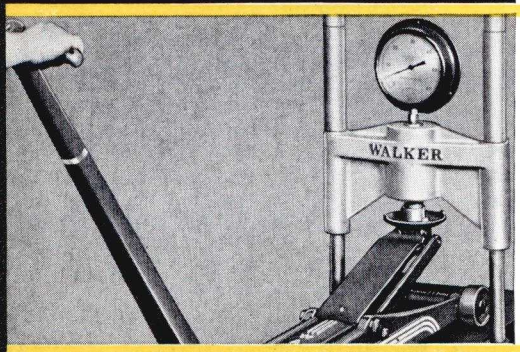

AUTOMATIC "OVERLOAD" PROTECTION

With the new Walker "Gold Seal" power unit, the operator, the vehicle and the jack are fully protected from overloading by a *separate automatic safety valve*. Whenever the jack is unknowingly overloaded, this safety valve automatically by-passes the pump oil preventing accidents or injury to the jack. A special advantage of the "Gold Seal" safety valve is that it *operates only under an overload condition* and is not weakened by constant operation. The Walker "Gold Seal" power unit will maintain its full rated lifting capacity throughout its full service life.

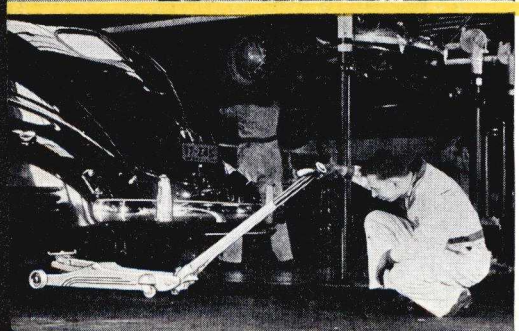

"FLASH CONTACT"

"Flash Contact" means that the operator of a Walker Jack with the new "Gold Seal" power unit can reach the load with the maximum speed and raise the load with minimum effort. *Two pumps* quickly raise the cap to the contact point—then the special "Silent Speed" booster pump cuts out automatically while the "Gold Seal" power pump raises with the lowest practical effort.

"Flash Contact" ideally combines speed and comfort contributing to the ease and efficiency of service work.

THE NEW DELUXE *Greyhounds*

WITH THE NEW "GOLD SEAL" POWER UNIT

AMERICA'S GREATEST HYDRAULIC SERVICE JACKS

WALKER LEADS IN JACKS

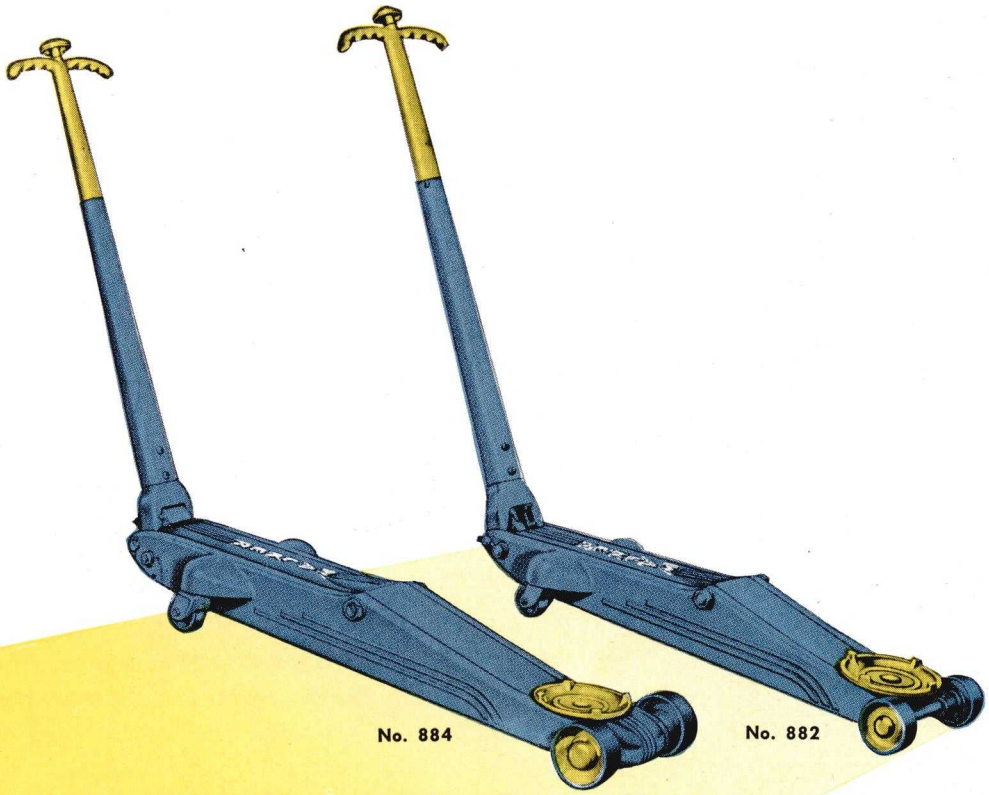

NEW PERFORMANCE . . . NEW EASE OF OPERATION . . . LONGER, MORE TROUBLE-FREE LIFE

It is seldom that the phrase "truly great" may be used with accuracy—yet that is the only description worthy of the new Deluxe Walker Greyhounds.

Here are two new jacks that surpass all previous standards . . . in superb performance . . . in progressive engineering . . . in beauty and color and streamlined showmanship.

These are the service jacks of tomorrow—destined to become the "yardstick" of all jack performance . . . with an extra margin of strength for the unexpected . . . an extra margin of safety for greater protection . . . an extra margin of power when emergency calls.

Tested through years of shop service . . . improved through careful engineering . . . refined through new production methods . . . and guarded by more rigid "quality control" —the new Deluxe Walker Greyhounds with the new "Gold Seal" power unit represent the finest combination of values a dollar can buy.

"EASY POSITIONING" HANDLE LOCK • Convenient foot-operated snap lock secures handle in two upright positions for easy positioning in close quarters.

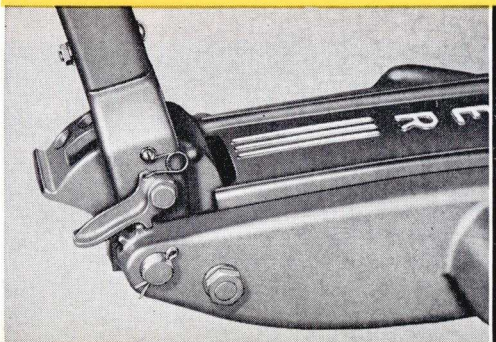

"PISTOL GRIP" HANDLE • Molded to fit the hands for greater comfort. Convenient dual-control knob at top controls both handle position and release valve.

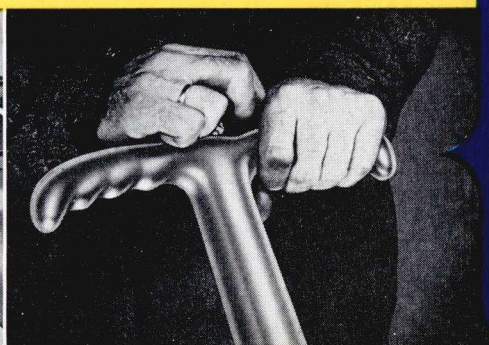

LOOK AT THESE Exclusive *Greyhound* Features

No. 884

4-TON HYDRAULIC ROLL-A-CAR

A NEW DELUXE WALKER *Greyhound*

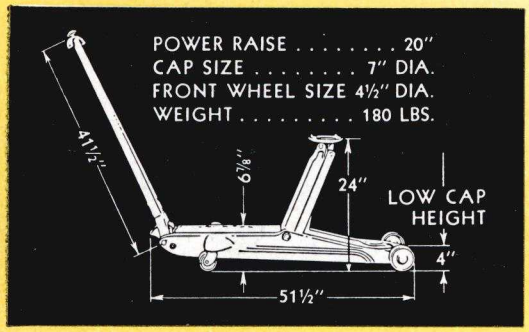

Here is the pride of any shop . . . the new DeLuxe 4-ton Walker Greyhound with the "Gold Seal" power unit. A masterpiece of hydraulic jack engineering . . . built for punishment . . . designed for power . . . streamlined for beauty and showmanship.

No. 884 will comfortably handle all passenger cars and all but the heaviest trucks and tractors. Starts at 4" and raises to a height of 24". Ample chassis length for intershop moving. Long handle with "pistol grip" control operates in three positions for greater convenience. Dual control knob has "keyless" safety lock to prevent accidental lowering. This new jack has all the great Greyhound characteristics. Its low, sleek chassis "ducks" under long, low overhangs and low-slung axles. Rugged malleable side plates and bell crank with free turning heat-treated and drop-forged cap.

"Big Boy," as it is familiarly known, has speed, ease of handling and ample raise to provide plenty of working space for any undercar job. An ideal jack for any shop with a wide range of traffic . . . safe . . . powerful . . . and trouble-free.

Only Walker *Greyhounds* Offer These Proven Advantages

FULL "RADIAL THRUST" CASTERS • Built to stand more punishment than any jack caster ever developed. Full radial thrust bearings absorb shocks from any direction. Extra long, rugged stems in replaceable, self lubricating bushing.

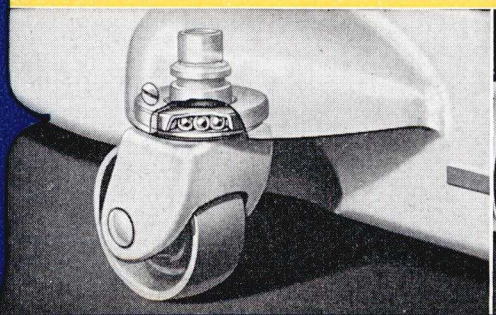

DIRT SEALED FRONT WHEELS • The front wheels on No. 884 are sealed against dirt and water and are equipped with lubrication fittings. All Greyhounds have over-size front wheel bearings for longer life and easier handling.

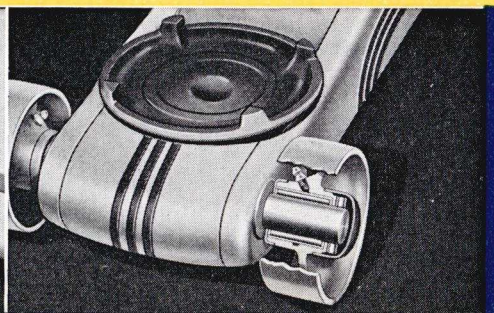

No. 882

2-TON HYDRAULIC ROLL-A-CAR

A NEW DELUXE WALKER

Greyhound

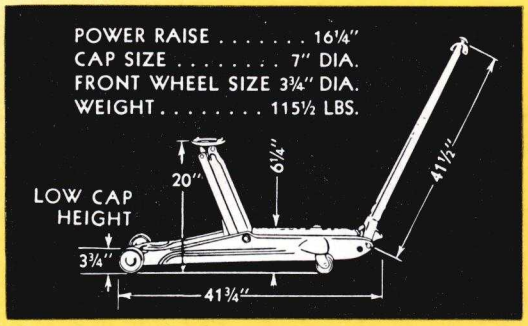

882-R—Same as 882 except with rubber tired wheels

Fast, strong and easy to handle . . . No. 882, the 2-ton member of the new DeLuxe Greyhound family, is still a full sized Roll-A-Car. Designed for the great light car service market, it has ample chassis length for dollying. With its rugged malleable side plates and bell crank, topped with a high carbon drop-forged steel cap, No. 882 handles all but the heaviest cars with unfailing safety and ease. Its power raise starts at 3¾" and raises to a full 20" . . . plenty of room for all kinds of work . . . with plenty of smooth, dependable lifting power delivered from its new "Gold Seal" power unit.

Complete control of the load at either of two handle positions, the new DeLuxe No. 882 has all of the outstanding performance features of the 4-ton model and other advanced refinements not ordinarily found in popular priced jacks.

Here is a jack that will handle the bulk of the average shop's service business with ample margins of safety and power—and at a price every shop can afford.

GIANT SAUCER LIFTING CAP • Made of high carbon steel, drop-forged and ribbed for extra strength, self-leveling with extra rugged prongs for "non-skid" grip. Special over-size stem and extra-large malleable bearings prevent sagging or bending. Handles all types of jobs.

"FEATHER BALANCE" • Careful location of rear casters in relation to gravity center achieves ideal "feather balance." Slight pressure on handle tilts jack so lifting cap may be swung into position with greatest of ease and speed.

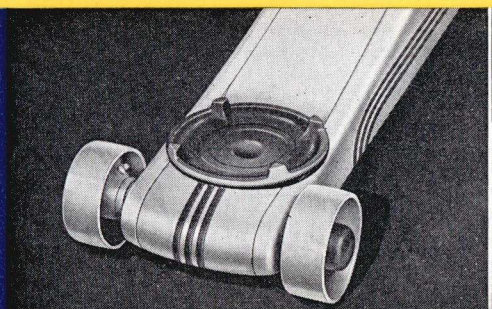

Look To Walker *Greyhounds* For Finer Performance

THE NEW DELUXE *Whippet*

WITH THE NEW "BLUE SEAL" POWER UNIT

Blue Seal

THE GREATEST JACK VALUE IN THE QUICK SERVICE CLASS

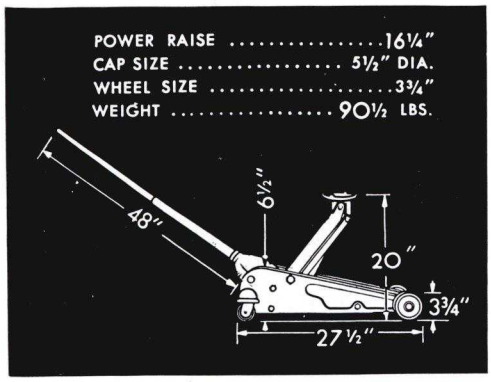

No. 867

3000 Lbs. Capacity
Hydraulic Lift-A-Car
With Swivel Cap
and Casters

NEW STRENGTH . . . NEW SMOOTHNESS . . . NEW EASE OF CONTROL AND OPERATION

Here is the ideal quick service jack for driveway . . . service floor . . . or road service. Here is the PERSONAL jack for every mechanic—the greatest jack value in the quick-service class—the new DeLuxe Walker "Whippet" with the new "Blue Seal" power unit.

Never has there been a finer combination of performance and value . . . for Walker engineering has built new strength into its new "Rigidized" Dreadnaught Steel Chassis . . . new smoothness and life into its "Blue Seal" power unit . . . new ease of operation into its control. No service operation is complete without a "Whippet" for every mechanic plus extras for the trouble car and other quick services such as brake and tire work. Because of their low cost, these versatile jacks quickly pay for themselves in greater shop efficiency.

THE JACK WITH THE "HANDY HANDLE"

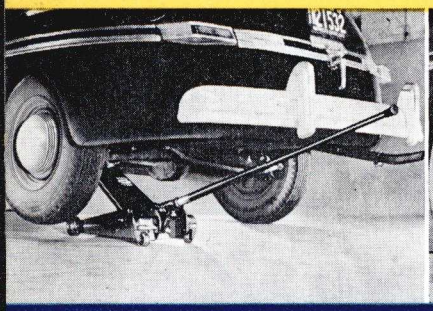

IT CONTROLS • New "Finger-Tip" control assures safe, smooth, positive control of lowering from any point on the long, full turning handle. No gears . . . no rods . . . nothing to get out of order.

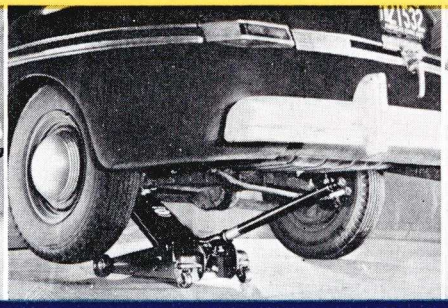

IT TELESCOPES • With a simple press of the thumb the "Whippet" handle telescopes to half its length — out of the way — nothing to trip over — or drive over. Convenient for close quarters.

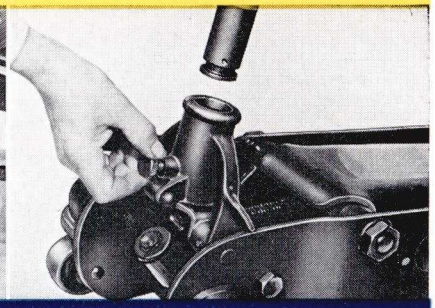

IT ZIPS OFF • Off zips the handle by a turn of the thumb screw . . . ready for the "trouble car." Up stands the handle when not in use . . . out of the way . . . occupying minimum space.

The "Blue Seal" All-Steel Hydraulic Power Unit

A New Highly Refined Hydraulic Mechanism

For Quick Service Type Jacks

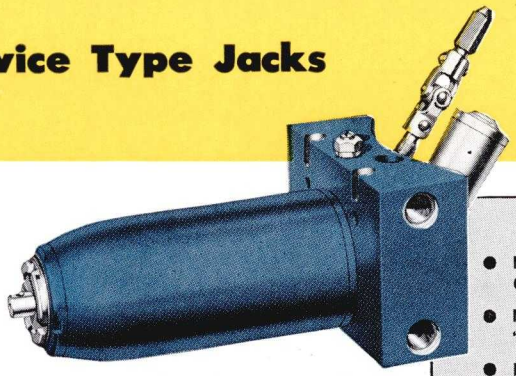

- NEW "I.S.D." POWER CYLINDER
- NEW SELF-CENTERING "FINGER TIP" CONTROL
- NEW "TOLERANCE .0015" PRECISION GROUND RECIPROCATING PARTS
- "SAFTI-MATIC" OVERLOAD PROTECTION

★

The new DeLuxe "Whippets" are powered by the new "Blue Seal" all-steel hydraulic unit . . . an adaptation of the "Gold Seal" unit for quick service type jacks. Into this unit have gone all of the outstanding "Gold Seal" features . . . the revolutionary "I.S.D." Power Cylinder for longer, smoother trouble-free performance . . . the new self-centering "Finger-Tip" control mechanism for more positive, effortless closing and more accurate control of lowering speed . . . "Tolerance .0015" precision ground reciprocating parts for reduction of internal wear. And for the protection of the jack and the load into each "Blue Seal" power unit is built the "Safti-matic" valve . . . factory set and sealed to automatically protect the Whippets from damaging overload.

CHECK THESE OUTSTANDING WHIPPET "GREATER VALUE" FEATURES

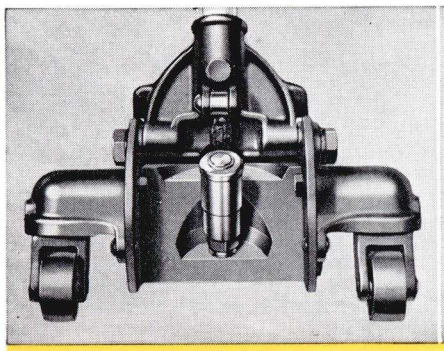

CENTER PUMP DRIVE. Center pump location eliminates side strains on pump bearings preventing leakage and undue wear. Fully enclosed, greased packed metal shielded pump protected from grit, grime and water.

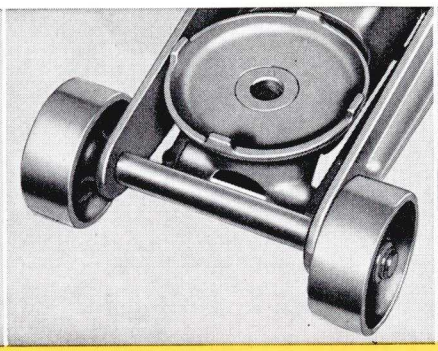

NEW "DOUBLE TREAD" FRONT WHEELS. Extra wide tread on "Whippet" front wheels provide easier handling and greater load bearing surface . . . particularly valuable on rough surfaces or gravel and asphalt.

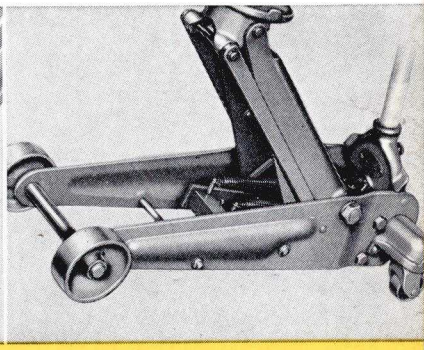

NEW RIGIDIZED "DREADNAUGHT" STEEL CHASSIS. Specially formed and reinforced steel side plates and basic chassis construction have been further "rigidized" to resist twisting and weaving under load.

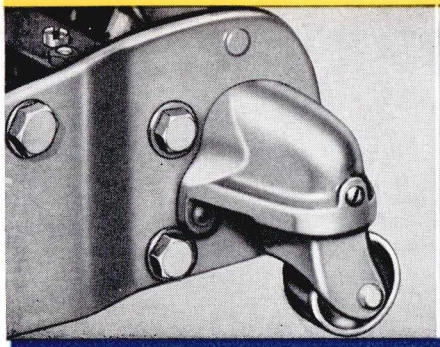

FULL "RADIAL THRUST" CASTERS. Whippet casters have full "radial thrust" bearings which absorb and withstand severe shock from any direction . . . self-lubricating replaceable sleeves . . . the finest casters ever developed.

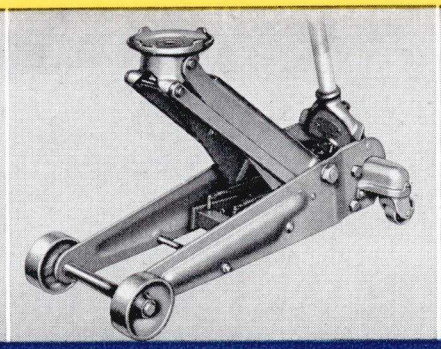

NEW RE-INFORCED BELL CRANK. The new "Whippet" bell crank or lifting arm is specially formed and re-inforced for even greater strength . . . designed in detail to handle eccentric loads safely and steadily.

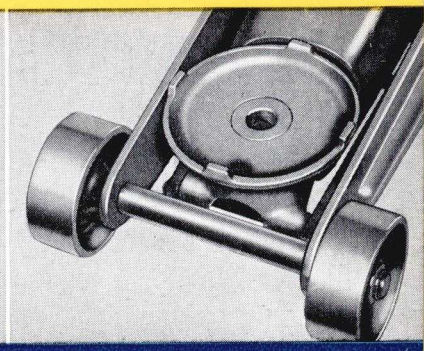

"SURE-GRIP" OVER-SIZE CAP. Made of rugged formed steel with ample space between the prongs for sure, positive grip . . . self-leveling in all positions. Easily rotated. Will not sag or bend.

Blue Boy II THE NEW ALL-PURPOSE

UTILITY LIFT-A-CAR No. 707

2 TONS CAPACITY

A NECESSITY FOR MODERN SERVICE WORK

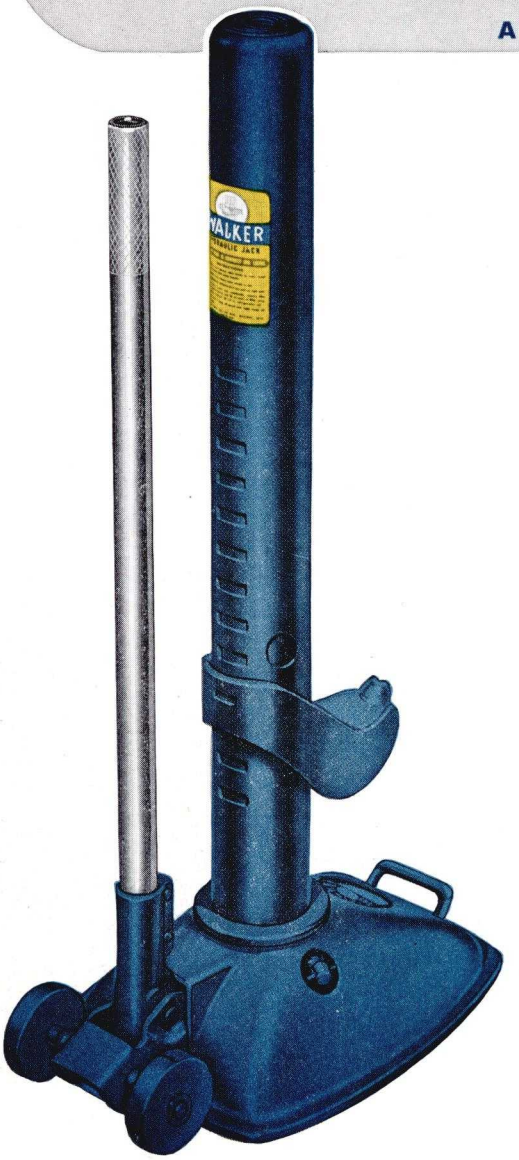

Blue Boy II . . . the new all-purpose utility Lift-A-Car is an entirely new hydraulic service jack . . . a jack specifically designed and built to meet the many new lifting problems of modern service. Operated from an upright position, it is compact, mobile and easy to handle. Its upright design provides an exceptionally wide lifting range—20 full inches of power raise, plus a 12″ adjustment on the lifting hook. Low enough in starting point to get under any bumper . . . high enough in top height to give ample wheel clearance from deepest skirted fenders.

No. 707 is ruggedly built to handle a wide variety of "service lifts." Its universal lifting hook fits any bumper and holds securely without danger to bumper . . . car . . . or jack. Positive hook adjustment slots . . . no friction. The hydraulic pump assembly is completely protected from damage in use. Conveniently located and protected release control is operated by removable handle.

GREATER COLUMN STRENGTH • Unusual strength and stability are built into Blue Boy II by rigidly threading the extra heavy reservoir tube into the base . . . relieving the lifting ram cylinder of strains and providing extra protection against off-center loads. Close tolerance fit between outer sleeve and column positively controls bending or weaving and provides added stability under loads.

LARGE FLAT BOTTOM "GRAVITY CENTERED" BASE • The base for No. 707 has an unusually large flat surface area and is so designed that the load is carried over the "gravity center" for increased safety and stability.

SPECIFICATIONS

Capacity	2 Tons
Capacity—"Top Column" Lifting Position	3 Tons
Closed Height	28¾″
Lowest Starting Height—On Hook	5⅛″
Maximum Height—On Hook	17⅛″
Base Dimensions	9 x 11½″
Power Raise	20″
Hook Adjustment	12″
Handle Length	25¼″
Base Surface Area	103½ Sq. Ins.
Weight	46 Lbs.

EXTRA "TOP COLUMN" LIFTING POSITION—Top of column is flat and finished with positive concentric circle cap to provide additional lifting position and extra height for lifting farm vehicles, light trucks, etc. Full rated capacity of jack can be "top lifted" with complete safety.

LARGE FREE ROLLING WHEELS—Blue Boy II is easy to handle and position. Just tip it back on its ample open wheels and roll it into position. Light—fast—highly maneuverable. No stooping or kneeling to get it into place. An ideal "at-the-door" jack for driveway service.

CONVENIENT "PICK-UP" HANDLE—Rigidly welded to the base is a handy "pick-up" handle. Helps when putting Blue Boy II into the trouble car. Convenient for road service. A thoughtful Walker exclusive feature that makes No. 707 an outstanding value.

The Most Versatile Hydraulic Service Jack on the Market . . . The Newest Development in Convenient Portable Lifting Power for Every Shop . . . Service Station or Mechanic

Two Tons of Handy Hydraulic Lifting Power

This is it . . . This is the jack of a 1000 uses . . . This is the jack designed to meet the many varied new lifting problems. This is the jack that will save money . . . save time. Every shop . . . every service station . . . every implement dealer needs one or more Blue Boy II, for no other jack is so handy . . . so versatile. *Car dealers* and *independent maintenance shops* should have a Blue Boy II for every mechanic—a personal jack in every stall and an "extra" for road service. *Service stations* need Blue Boy II for tire changes, chains, wheel packing. *Body shops* will find Blue Boy II handy for fender work; *fleet shops* for inspection, brake adjustments and many other jobs—and its high lift and wide range make it a must for *tractor shop*. No service operation can have too many of these great, new stand-up service jacks.

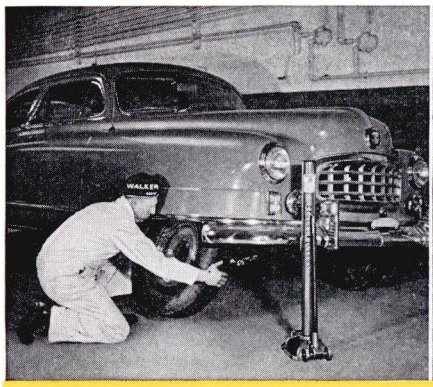

SPEEDS UP TIRE AND WHEEL CHANGING— Lifts cars with deep skirted fenders high enough for easy wheel removal. No blocks...no extra jacks needed. Good for chains and washing, too.

HANDY FOR BRAKE WORK— High lift gives plenty of room for brake work or front end inspections. Easy to handle, compact. Mechanics like Blue Boy II. It makes their job easier.

A BOON TO BODY WORK— Lifts high enough to provide convenient work room... speeds up the job. No blocking necessary. Helps in changing tail pipes, too, when extra clearance is needed.

THE JACK OF A THOUSAND USES...

A "MUST" FOR TRACTOR SERVICE— This picture tells its own story. How else can a high tractor axle lift be made without blocks or extra jacks? Fine for repositioning wheels. Blue Boy II is tops for tractors.

PERFECT FOR ROAD SERVICE— Toss it into "trouble car" and off you go. Lifts cars in tough spots. Large, flat bottom base will not sink in mud or soft shoulders. Convenient pick-up handle.

A MECHANIC'S FRIEND— Blue Boy II is the ideal "personal" jack for each mechanic...for certain engine jobs...for any job that requires lifting. A jack for every mechanic is a wise investment.

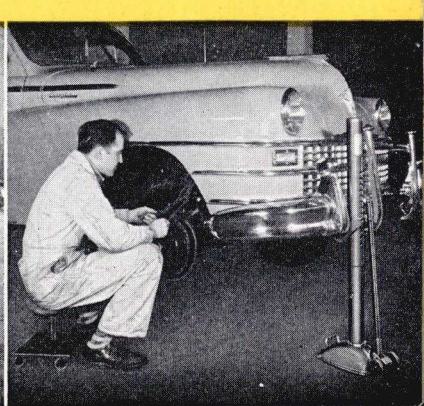

WALKER 2½-TON MECHANICAL ROLL-A-CAR No. 745

THE FINEST MECHANICAL SERVICE JACK ON THE MARKET

With its thousands of enthusiastic users and its years of continuous improvement, engineering and outstanding field performance, No. 745 Mechanical Roll-A-Car is one of the most popular service jacks ever made. Extra-long chassis and low frame with adequate height to handle any passenger car. Strong, oversize self-leveling drop-forged lifting cap with 1¾″ bayonet locked extension. Extra-long reinforced handle operates in three convenient positions with short, easy strokes. Large, smooth-running bearings in casters and front wheels and oversize bearing for the cap assure long life.

Special feature of No. 745 is convenient foot-operated kick-up pedal and reverse lever making it one of the fastest jacks on the market. Counterbalanced for quick, easy positioning. An ideal general-purpose jack with a long, record-proven value . . . A real bargain in trouble-free lifting equipment.

745-R—Same as 745 except with rubber-tired wheels

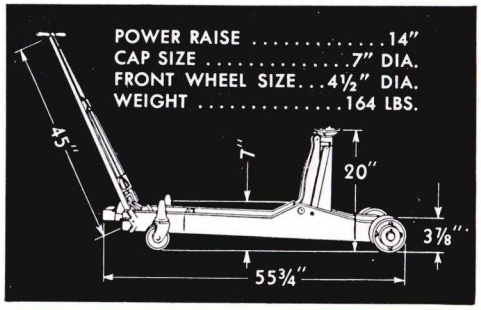

WALKER LEADS IN JACKS

WALKER 10-TON HYDRAULIC ROLL-A-CAR No. 780

Famous the world over for its unfailing dependability, this great 10-ton Walker Hydraulic Roll-A-Car is big enough and strong enough to handle any bus or truck lifting job with ease and safety. The cylinder in its precision-made hydraulic power unit is specially honed to assure minimum effort, smoother performance and longer life. Its long, rugged steel frame is built low to reach under long overhangs. Rugged malleable bellcrank with self-leveling drop-forged, heat-treated cap. Roller bearing front and rear wheels and ball bearing casters assure easier positioning and dollying.

Long 43″ handle may be rigidly locked in three positions for intra-shop moving. Here is truly a tried and tested jack for heavy-duty service . . . a necessity for fleet shops servicing heavy trucks and buses.

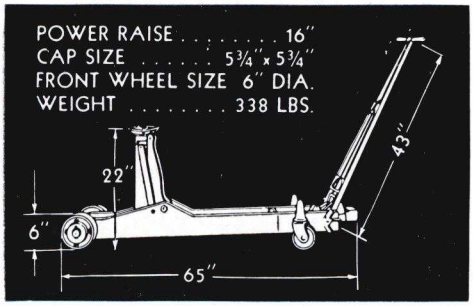

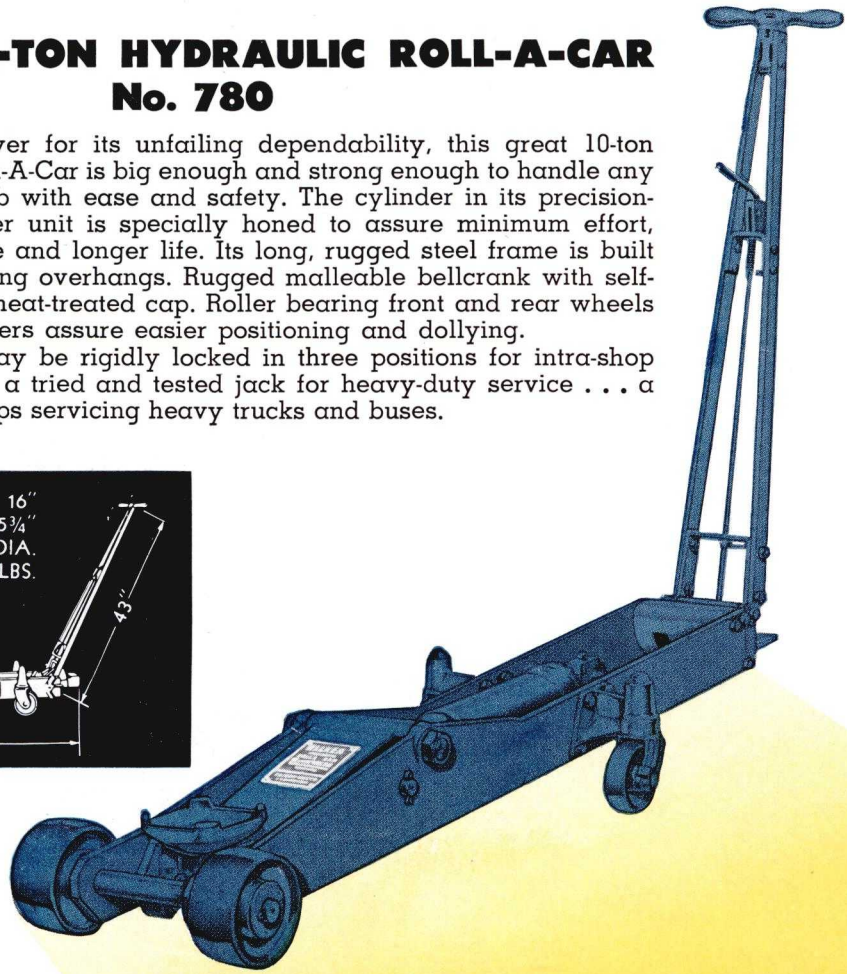

FAMOUS WALKER UNIT LIFT—No. 798

A TIME SAVER FOR SERVICING HEAVY UNDER-VEHICLE UNITS

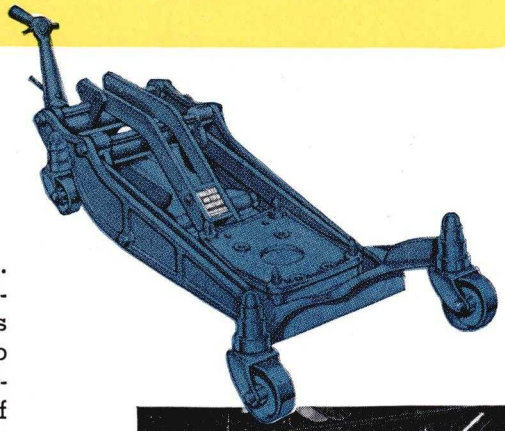

Here is one of the handiest lifting tools a shop can own. It provides a safe, easy means of removing and replacing transmissions, differentials, front and rear axle units and many other different under-vehicle jobs. Large cap is also adaptable to individual "shop-made" holding devices. It saves man-hours . . . and avoids the danger of accidents and serious injuries often resulting from the handling of these heavy units. It soon pays for itself in actual time saved.

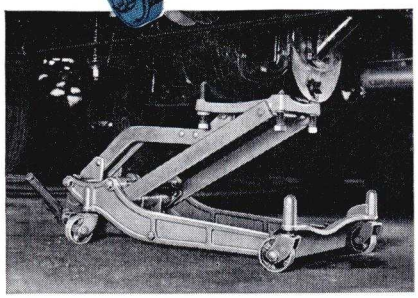

SPECIFICATIONS

Low lifting point 3"—Raise 22"—Full Height 25"—Cap Size 10" x 10" fitted with four adjustable screw grips cone pointed and hardened—Length 48"—Width 20". Highest point of frame 9"—Capacity 1000 lbs. —Weight 138 lbs.

THE NEW DELUXE WALKER "STEEL HORSE" No.799

WITH THE NEW "STABILIZED" SAFETY BASE

A new, low-cost, adjustable support that every shop can afford—specially formed from selected steel with all-welded and reinforced construction. Large "stabilized" safety base provides extra stability and protection against eccentric loading. Rugged malleable iron rack bar and cap quickly adjusted to proper heights. Range from 11½" to 18". Assures safe working conditions—frees expensive jacks for other services.

SPECIFICATIONS

Height	Raise	Base	Full Height	Capacity	Weight
11½"	6½"	8⅜" x 9½"	18"	2 tons	26 lb. pr.

THE HI-BOY—FREES FROZEN SHACKLES, SPREADS SPRINGS, LOCATES HIDDEN SQUEAKS, INCREASES BODY CLEARANCE

Indispensable for any lift-equipped service department. The Walker Hi-Boy relieves weight from car springs and shackles . . . lets grease penetrate between spring leaves . . . lets it reach pressure points in shackles where it is needed . . . finds squeaks . . . increases body clearance for tail pipe removal, etc. Folding foot pedal for rolling into position. Also has two positions for 1" or 2" rocking stroke. 50 lb. pressure on pedal exerts 400 lbs. on cap. Saddle type malleable cap with corrugated face.

No. 700

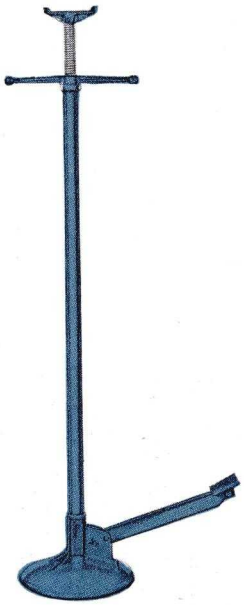

SPECIFICATIONS

Closed Height .....54"
Screw Adjustment .....27"
Extended Height .....81"
Rocking Stroke (Foot Pedal) .....1" or 2"
Weight .....34 lbs.

THE NEW DELUXE WALKER

"Series 900"

PORTABLE HYDRAULIC JACKS

WITH THE NEW "PROJECTILE" TANK

Few products in the field of hydraulic lifting equipment have so fine a background of performance . . . dependability . . . and safety as the new DeLuxe Walker "Series 900" Portable Hydraulic Jacks. Backed by years of careful, constantly refining engineering, they have a continuing approach to true perfection.

The new "Projectile" tank . . . designed in the shape of a heavy armor piercing shell . . . withstands greater shock . . . distributes the weight of the load more evenly . . . more completely to the heavy base . . . resists damage from eccentric loading to which every jack is subject.

But the "Projectile" tank is not the only new feature that distinguishes the new DeLuxe "Series 900." Cup leathers have been redesigned and improved . . . new tolerances and "quality controls" assure more positive packing.

Yes, these are great jacks. Great not only in their finer precision manufacture . . . their rugged "can-take-it" construction . . . their smooth dependable operation—but great because the combination of all these outstanding characteristics creates a dollar-for-dollar value that cannot be duplicated.

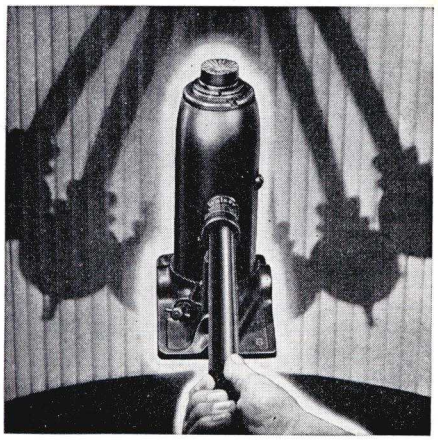

"PENDULUM BALANCE" FOR EASY POSITIONING

To assure easy positioning the "Series 900" is designed to take an upright position automatically when lifted by the handle. The strong malleable iron handle socket is located in the center of the jack and above the center of gravity. This helpful feature saves time and tempers when placing the jack.

These Features Mean Finer Performance

"SELF-LOCKING" EXTENSION SCREW WITH INTEGRAL CAP

An outstanding feature is the integral cap and extension screw. Specially forged from high carbon steel, the cap is break-proof and cannot be lost. Strong "radial flutes" insure a firm skid-proof grip on the load. The extension screw is "coarse threaded" for quick adjustment and is "self-locking" under load.

"SNUG-FIT" POWER PUMP

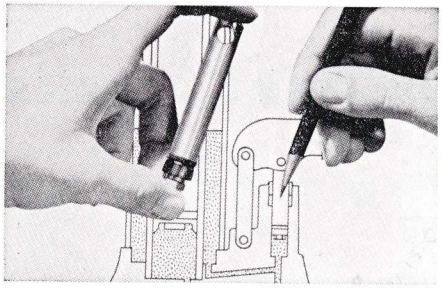

Made of selected steel, the power pump piston is "snug-fit" into the pump barrel and oil-sealed with strong, specially impregnated cup leathers to assure the greatest possible efficiency and long, dependable life in service. No wasted handle strokes . . . no wasted effort . . . no wasted action.

"MICRO-ACCURATE" RELEASE

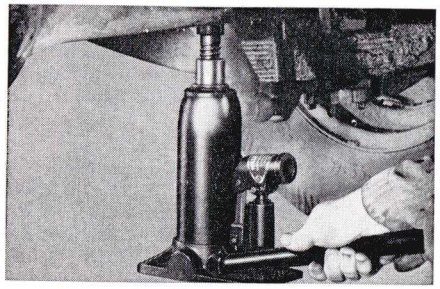

Constant and accurate control over the speed of lowering is assured by the "Micro-Accurate" Safety Release. Operated by a special bayonet end on the handle, this safety release enables the operator to easily and safely lower the load at any desired speed.

RUGGED MALLEABLE IRON BASE AND PUMP BARREL

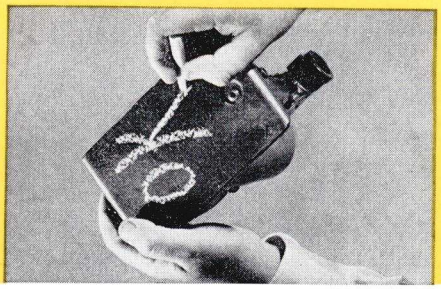

The base and the pump barrel are integral, made of rugged break-proof malleable iron, ribbed for extra strength and checked by X-Ray for imperfections. Well proportioned, solid, non-tipping, non-wobbling. Easily flushed oil screens are built into oil lines to clean the oil before entering the power pump.

"RYTH-MATIC" VALVE ACTION

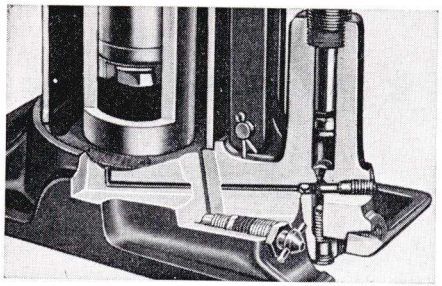

The efficient performance of any hydraulic jack depends upon its internal valve action—suction and discharge valves must work in perfect synchronization and at lightning speed. Closing action must be positive. To all of these requirements Ryth-matic Valve Action answers perfectly.

"SOLID END" LIFTING RAM

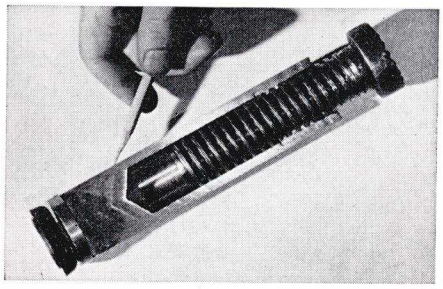

To resist eccentric loads at top height, the lower end of the lifting ram is solid steel . . . not hollow as in ordinary jacks. This provides extra strength where extra strength is needed most—the strength to resist the bending force from side thrust.

THE NEW WALKER DELUXE

"Series 900"

PORTABLE HYDRAULIC JACKS
1½ TO 12 TONS

The new DeLuxe "Series 900" covers the basic field of portable hydraulics . . . with a capacity and size for every type of vehicle—from passenger cars to heavy trucks, buses and tractors. In choosing a portable hydraulic jack as tool box equipment, it is well to provide ample capacity as the vehicle is usually carrying a capacity "pay-load" when the jack is needed most and the jack must raise both the weight of the vehicle and the "pay-load." Over-capacity is far more economical than under-capacity.

The outstanding value that has been engineered into the new DeLuxe "Series 900" . . . advantages that assure extra-long, safe, dependable performance . . . make their low cost even lower by comparison.

FOR PASSENGER CARS AND LIGHT TRUCKS

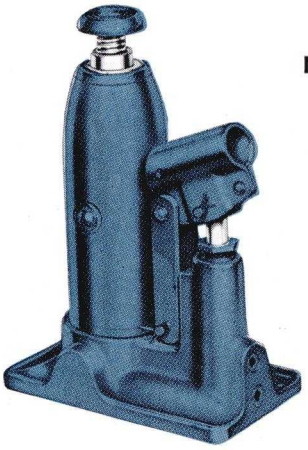

No. 906—1½ TONS

All the operating features and lifting ease for which the new DeLuxe Walker "900's" are famous, make this fine passenger car jack the favorite among those who prefer the conventional hydraulic jack. Ample capacity and range to handle popular cars.

No. 925—3 TONS

Here is smooth hydraulic lifting power in the medium range of service. These dependable tool box jacks have the combination of easy operation, rugged construction and simplicity of maintenance demanded for commercial and fleet service.

No.	Capacity	Height	Raise	Ext. Screw	Ram. Dia.	Base Size	Handle	Weight
906	1½ tons	7"	5⅛"	2⅛"	⅞"	3¼" x 5⅝"	31"	9 lbs.
925	3 tons	8½"	6"	3½"	1⅛"	3¾" x 6⅝"	33½"	16 lbs.

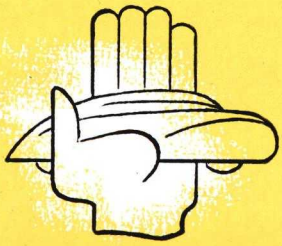

HANDLE No. 3
Two-piece unit. Fits No. 906

FOR MEDIUM TRUCKS AND BUSES

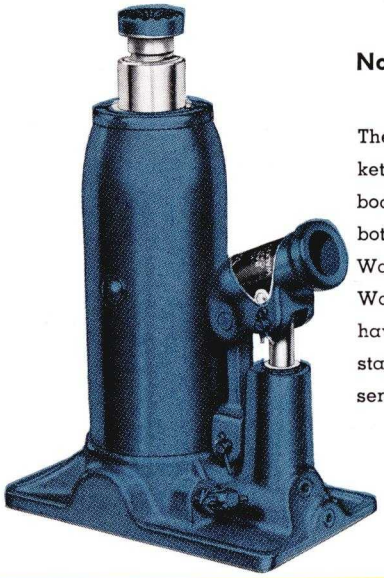

No. 930—5 TONS

These jacks cover the market for light fleets, panel body trucks and light buses both in range and capacity. Walker "Know-How" and Walker quality production have made these jacks the standard of value in fleet service.

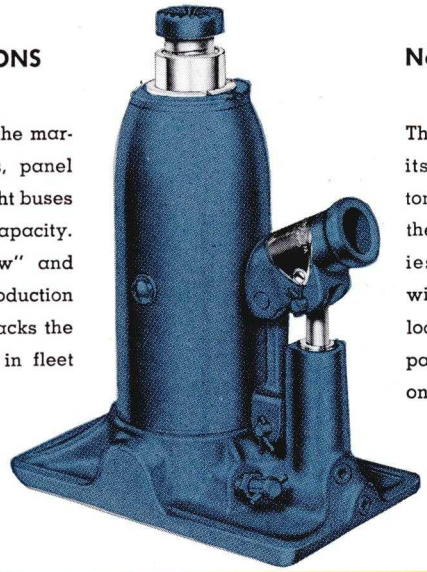

No. 935—8 TONS

The rugged No. 935 with its rated capacity of 8 tons will handle all but the very largest and heaviest trucks and buses without removing the payload. Major trucking companies have standardized on this dependable jack.

No.	Capacity	Height	Raise	Ext. Screw	Ram Dia.	Base Size	Handle	Weight
930	5 tons	9"	6¼"	4"	1⅜"	4⅛" x 7⅛"	33½"	19 lbs.
935	8 tons	9"	6¼"	4¼"	1½"	4⅝" x 7⅞"	33½"	22 lbs.

FOR HEAVY DUTY TRUCKS AND BUSES

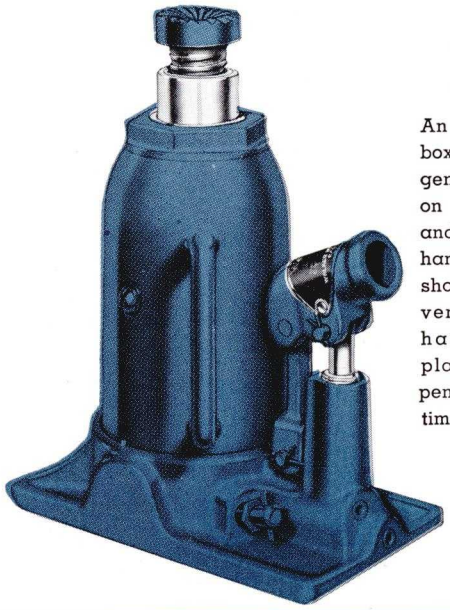

No. 945
12 TONS

An excellent tool box jack for emergency tire changes on heavy trucks and buses. Also handy for general shop use. Has convenient carrying handle. Easily placed and dependable at all times.

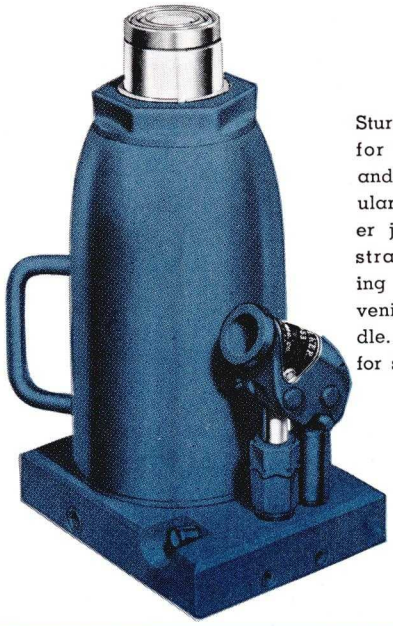

No. 953
20 TONS

Sturdy, powerful jack for heaviest trucks and buses. Also a popular shop service power jack for bending, straightening, pushing and lifting. Convenient carrying handle. Heavy duty base for stability.

No.	Capacity	Height	Raise	Ext. Screw	Ram Dia.	Base Size	Handle	Weight
945	12 tons	9¼"	5½"	3¼"	1¾"	4⅝" x 8⅜"	23½"	28 lbs.
953	20 tons	10¾"	7¾"	—	2¼"	7" x 5½"	23½"	45 lbs.

HANDLE No. 4

Two-piece unit. Fits No. 925, No. 930, No. 935

HANDLE No. 5

One-piece unit. Fits No. 945, 953, 960, 965

THE NEW DELUXE WALKER

"Series 900"

HEAVY DUTY HYDRAULIC POWER JACKS

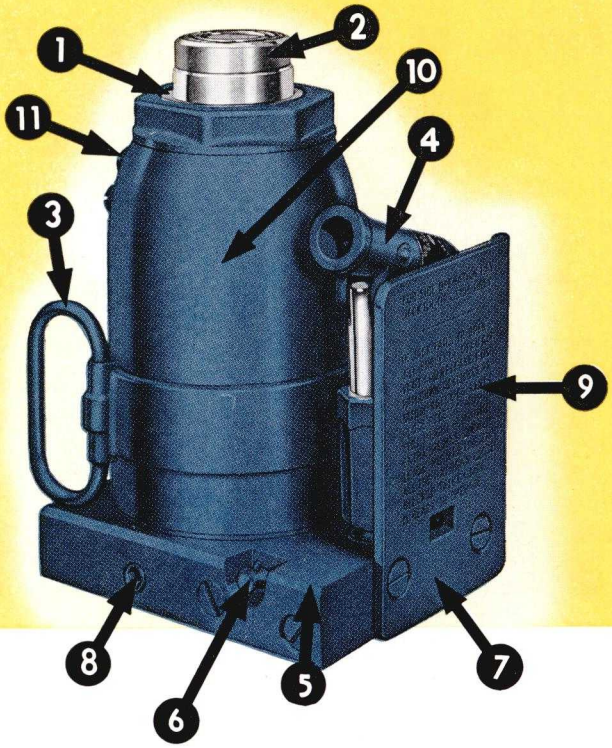

"Big brothers" in the new DeLuxe Walker "Series 900" are these two heavy-duty hydraulic power jacks —with their new stamina . . . their new strength . . . their new performance. For greater ease of control . . . the *new self-centering finger-tip control mechanism* has been added. For greater strength and shock resistance . . . the new "projectile tank." For longer life and positive holding . . . the *revolutionary new I.S.D. power cylinder* . . . and for tough trouble-free operation, the *new "eccentric load" seal* between the power cylinder and the strong steel base. Finer than ever . . . these new Heavy-Duty "900's" . . . now more than ever offer industry and service an outstanding source of dependable portable hydraulic power.

ADDITIONAL FEATURES

1. **Removable gland nut for replacing packings**
2. **High grade heat treated alloy steel cap serrated for "grip"**
3. **Adjustable handle for convenience in carrying and placing**
4. **"Flash Contact" Tandem Pumps for faster operation**
5. **Solid steel precision machined base**
6. **New "Finger-Tip" Release for positive control**
7. **Heavy Side Rest Plate for side operation and pump protection**
8. **Convenient "Load Gauge" outlet when desired**
9. **Permanent operating instructions on rest plate**
10. **"Projectile" Tank precision built with proper air-oil ratio**
11. **Positive Action Vent prevents air binding**

EXCLUSIVE "FLASH CONTACT" TANDEM PUMPS

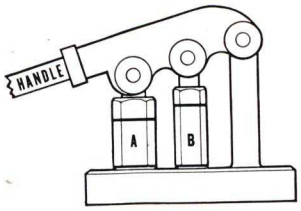

One of the most outstanding features of the super-power jacks is the "flash contact" tandem pumps. This exclusive principle increases the speed of contacting the load by from *8 to 10 times*. The cutover from the speed pump to the power pump is automatic . . . no repositioning of the handle . . . no lost time.

The diagram above shows how the "Flash Contact" Tandem Pumps work. The jack cap is brought into contact with the load by the combination of the Speed Pump (A) and Power Pump (B) which moves the power ram 8 to 10 times faster than the Power Pump (B) alone. When contact with the load is made, the Speed Pump (A) cuts out automatically and the Power Pump (B) carries on. Both pumps operate from the same handle socket without repositioning or removing handle.

No. 960 . . . 30 TONS

Capacity: 30 tons
Raise: 7⅛″
Base Size: 8″ x 6½″
Handle: 23½″
Closed Height: 11″
Total Height: 18⅛″
Ram Diameter: 2¾″
Weight: 67 lbs.

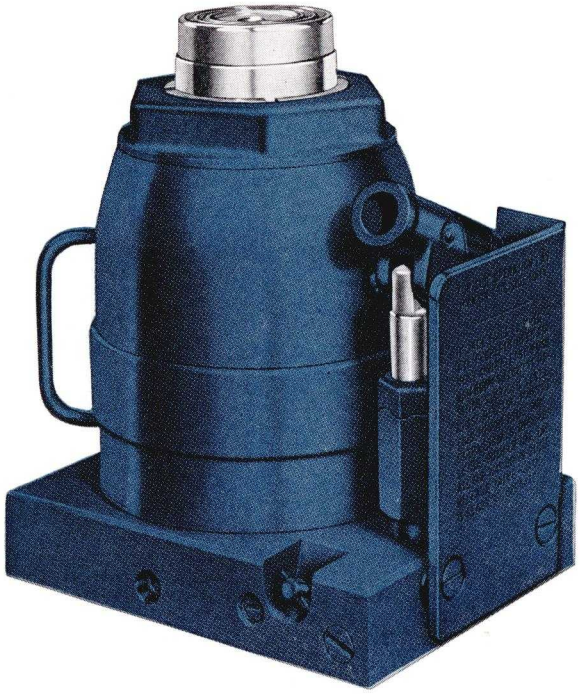

No. 965 . . . 50 TONS

Capacity: 50 tons
Raise: 6″
Base Size: 9⅞″ x 8″
Handle: 23½″
Closed Height: 11″
Total Height: 17″
Ram Diameter: 3⅝″
Weight: 111 lbs.

For Handle Specification See Page 17

WALKER "LOAD INDICATOR" GAUGES

Special "Load Indicator" gauges are available for all "Series 900" Hydraulic Jacks. These gauges adapt the jack to many special purposes such as testing the breaking point of materials; making press fits to predetermined pressures; testing load bearing strength of materials; checking load for shoring purposes; drawing cable to uniform tension, etc. Gauges are furnished in two sizes—4½″ and 6″ dials—calibrated to the capacity of the jack. Each gauge is complete with adaptor plug to fit jack.

How to order Walker "Load Indicator" Gauges • To order any Walker "Load Indicator" gauge specify the Walker jack model number and the size of dial desired. To install gauge, remove pressure plug in base of jack and insert adaptor. Screw gauge into adaptor.

New Walker "3 Star" Passenger Car Specials

THE NEW WALKER "903"

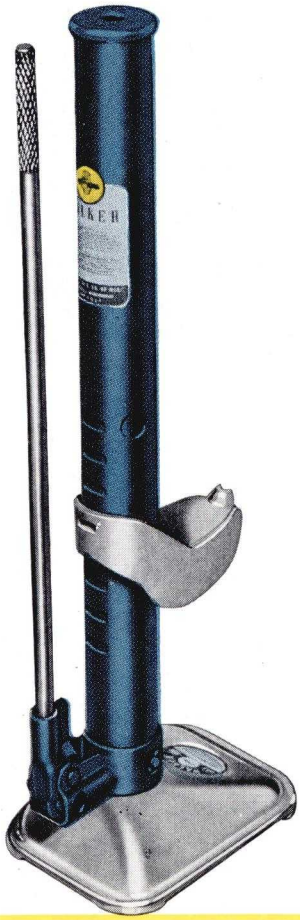

AMERICA'S FINEST HYDRAULIC BUMPER JACK WITH NEW 180° OPERATING RADIUS

Here is a truly great, new passenger car jack . . . a jack that surpasses all previous standards of strength . . . of safety . . . of performance and utility . . . the new Walker "903." Never before has there been a jack so versatile . . . a jack so handsome and yet beneath its streamlined, eye-catching beauty is all the stamina . . . the ruggedness . . . the smoothness that makes a champion.

Yes, it does cost more than "mine run" hydraulic jacks, because it's worth more. Its finer precision engineering . . . its greater strength and reliability were conceived for those motorists who want and can afford the finest . . . who know that real quality is the greatest economy of all.

- **ALL-CAR UNIVERSAL LIFTING HOOK fits any bumper and holds securely without damage. 7" adjustable range.**
- **EXTRA "TOP COLUMN" LIFTING POSITION—for high lifting points, flat column top will handle full capacity load.**
- **EXTRA-STRONG LIFTING COLUMN—provides exceptional stability. Exclusive design protects against off-center loads and weaving.**
- **LARGE "GRAVITY CENTERED" BASE—double usual base area with load "gravity centered" for stability and safety. Base removable.**
- **PRECISION-BUILT HYDRAULIC POWER UNIT—pump completely protected. No exposed parts. Positive release control.**

180° OPERATING RADIUS—Simply by rotating the pump when positioning the "903" can be operated from any position within 180°. This exclusive feature permits user to work safely and easily regardless of the closeness of the car in front or behind.

SPECIFICATIONS

Capacity	1½ tons	Hook Adjustment	7"
Closed Height	25¾"	Base	6" x 8"
Power Raise	18"	Base Surface Area	48 sq. in.
Low Starting Height-on-hook	5½"	Handle Length	22"
Weight	23 lbs.		

NEW DELUXE *Vertilift* No. 120

THE JACK THAT REVOLUTIONIZED TIRE CHANGING ● New "Cantilever" action developed by Walker engineers. Amazing "Inclined Booster Plane" reduces handle effort at critical load positions . . . introduces new ease of operation . . . permits unusually low starting height with ample power raise.

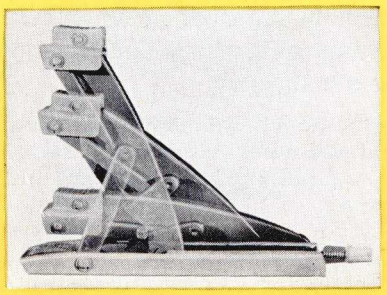

Never before has there been a jack like "Vertilift"—never before has it been possible to combine such a low starting height and ample power raise with easy handle effort in a mechanical jack. Study the actual multiple exposure photograph of the "Vertilift" in action. Notice how the full cantilever arm moves as the "Inclined Booster Plane" helps the load over the most critical point in the lifting range . . . and continues its movement until the cap has reached full height. Notice the *vertical* raise of the cap throughout its entire travel preserving without disturbance its original full firm grip on the load and the ground. Here is a new concept in mechanically operated jacks—ushering in a new era of ease of operation, greater stability and increased safety.

An Outstanding Selection of Fine Passenger Car Jacks For Every Requirement . . . For Any Make or Model Car

WALKER LEADS IN JACKS

THE NEW DELUXE WALKER "647"

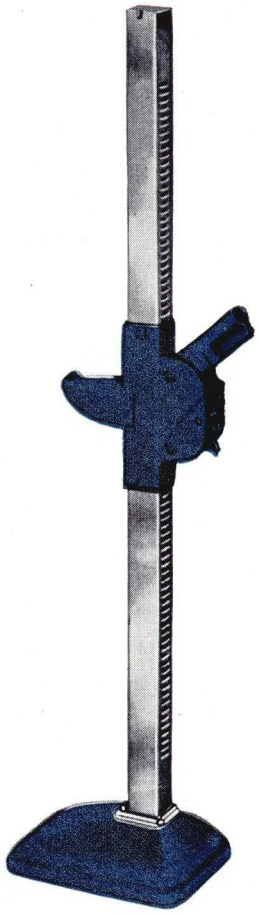

AMERICA'S FINEST MECHANICAL BUMPER JACK

New "Rigid Tube" Rack Bar . . . "Gravity Centered" Base . . . Universal Lifting Hook

The new Walker "647" is the greatest "buy" in the mechanical bumper jack field. Packed with new and advanced engineering features it combines greater safety and stability with a proven mechanical action. Replacing the now out-moded solid rack bar is the new Walker "Rigid Tube" section for greater rigidity and lightness. The large 48 sq. in. base is "gravity centered" for increased safety and stability.

Powered by the famous Walker mechanical unit, it raises and lowers the load with confidence inspiring positive "clicks." Lifting mechanism slides freely up and down (when control lever is in "down" position) for quick, easy positioning and drops automatically when free of the load. New Universal Lifting Hook handles all cars securely and without damage.

An ideal, all-around jack—at an economical price.

SPECIFICATIONS

Number	647	Upright	1⅛" x 1½"
Capacity	1 ton	Base Size	6" x 8"
Height	34½"	Handle	20"
Lifting Range	5½"-30⅞"	Weight	11¾ lbs.

- **NEW REINFORCED FLIP CAP for extra height when needed**
- **LARGE, RUGGED NON-SKID SADDLE for safer load gripping**
- **"LANDING BARGE" BASE—greater area for greater stability**
- **"SLEDGE TYPE" PROW for easier positioning on any surface**

U.S. Patent No. 2,469,048

SPECIFICATIONS

Capacity	2000 lbs.
Starting Height	4¾"
Raise	9⅝"
Flip Cap	2⅜"
Maximum Top Height	16¾"
Base Size	3⅝" x 18"
Handle Length	51⅞"
Weight	18 lbs.

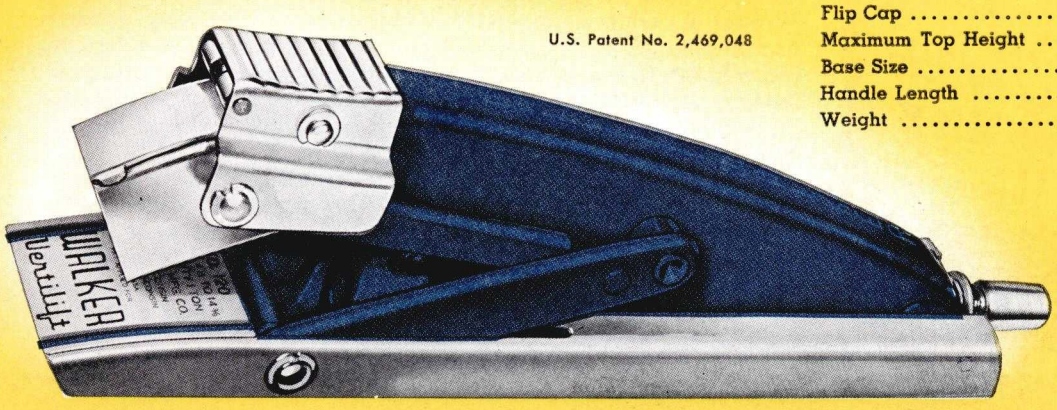

WALKER MECHANICAL TOOL BOX JACKS

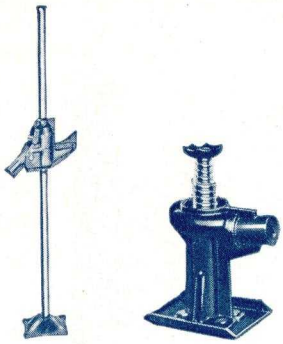

No. 294 No. 325

FOR USED CARS • These two Walker Mechanical Jacks meet the need for practical low-cost equipment for used cars. Strong, well designed, they will handle all cars with satisfaction and safety.

No. 294—FRICTION TYPE BUMPER JACK • Long a favorite, this jack has been engineered to fit bumpers on most cars. Quickly adjusted to the load, it operates with quiet, easy handle strokes. Large, removable base.

No. 325—DOUBLE SCREW TYPE • A pressed steel jack designed for the light car market. Double screw action gives lifting range from 5¼" to 12½". A good low-cost jack (unbranded).

SPECIFICATIONS

No.	Capacity	Height	Range	Handle	Weight
294	1 ton	33"	3¾"-30"	16"	8¾ lbs.
325	¾ ton	5¼"	5¼"-12½"	39"	4½ lbs.

No. 235 No. 270

FOR TRUCKS • These sturdy mechanical truck jacks combine high Walker quality with economy. Rugged malleable construction. Simple design for long, trouble-free service.

No. 235 • A practical jack with 3-ton capacity. Accurately cast gears, large ball bearings and simplified construction. Screw action assures years of safe, satisfactory usage. Flip cap for extra height when desired.

No. 270 • A double screw type jack of 5-ton capacity for heavy-duty truck and bus service. Rugged construction with strong, malleable iron gears operating on large ball bearings assures easy, safe operation.

SPECIFICATIONS

No.	Capacity	Height	Raise	Dia. Screws	Handle	Weight
235	3 tons	9⅛"	5⅞"	1¼"	15"	10½ lbs.
270	5 tons	8⅛"	10¼"	1"-1½"	24"	14½ lbs.

WALKER SUPER-KWICK

Formula 26 with Korium*
The New Super-Fast Rust Solvent

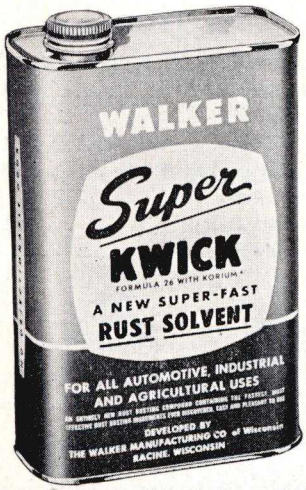

**Super-Kwick . . . Formula 26 with Korium*—was developed by Walker in cooperation with one of the nation's leading research organizations. It brings together a new combination of costly ingredients noted for their unusual creeping ability and rust-freeing action to which has been added a new, special, rare ingredient Korium* which further increases its rust-busting speed and efficiency.

Super-Kwick acts fast—so fast it almost seems alive. It creeps to an amazing depth to do its work thoroughly and effectively. It holds rust in a soft graphite-like form for hours. It leaves behind a surface of fine lubrication. Use Super-Kwick wherever "rust-busting" problems are encountered. It is simple and pleasant. No strong odors. Available in gallon, quart and 8 oz. containers.

NEW "ANTI-FOAMING"

WALKER

Hydroyl-50★

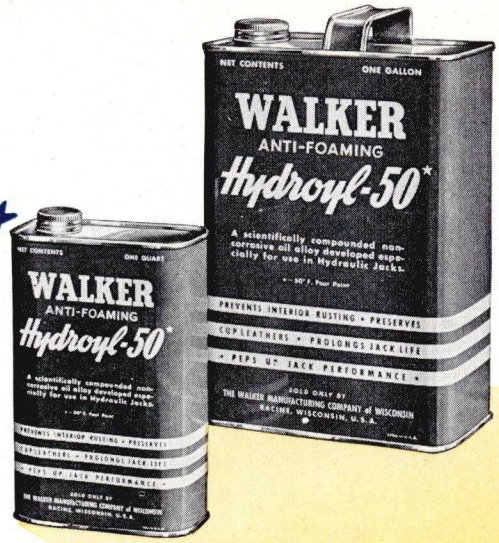

A SCIENTIFICALLY COMPOUNDED, NON-CORROSIVE OIL ALLOY DEVELOPED ESPECIALLY FOR USE IN HYDRAULIC JACKS

- ★ **Prevents interior rusting**
- ★ **Preserves cup leathers**
- ★ **Prevents foaming and air binding**
- ★ **Prolongs jack life**
- ★ **Peps up jack performance**
- ★ **Flows at 50° below zero (-50°)**

How to Figure Walker Hydroyl-50 Requirements

To determine how much Walker Hydroyl-50 is needed for a complete "DRAIN, FLUSH and REFILL" treatment of a group of hydraulic jacks, make a list of the jacks and their capacities and refer to the following table:

APPROXIMATE OIL CAPACITIES

Service Jacks

10 Ton Service Jacks	1½ to 2 quarts
4 Ton Service Jacks	1 to 1½ quarts
2 to 3 Ton Service Jacks	½ to 1 quart
1 to 1½ Ton Quick Service	½ to 1 pint

Portable Hydraulics

1½ to 2 Tons	¼ to ½ pint
3 to 8 Tons	½ to ¾ pint
12 Tons	1 to 1½ pints
20 Tons	1½ to 2 pints

The new Walker Hydroyl-50 is not just ordinary light oil commonly offered for use in hydraulic jacks. It is a scientifically compounded OIL ALLOY now containing a *special anti-foaming agent* in addition to the other costly ingredients that prevent interior rusting and preserve cup leathers.

Interior rusting in hydraulic jacks can result from atmospheric condensation because the oil ordinarily used to operate a jack is of low viscosity and leaves no protective film.

In Walker Hydroyl-50 there is a special rust inhibiting ingredient which provides a protective coating against corrosion from atmospheric condensation. It also has preserving qualities for cup leathers.

The new anti-foaming agent prevents Hydroyl-50 from bubbling and fizzing when released while under pressure, preventing air binding and assuring smoother, cleaner operation.

The use of Walker Hydroyl-50 in all hydraulic jacks regardless of make is an assurance of longer, better jack operation. Periodically "Drain, Flush and Refill with Walker Hydroyl-50."

WALKER JACKS

Backed by Company Owned and Operated Service Branches

In order to provide Walker Jack users with a service program in keeping with the high quality of Walker Jacks, *factory owned* and *operated* service branches are maintained in convenient, selected cities throughout United States and Canada.

Staffed by factory-trained specialists, these Walker Service Branches provide complete repair facilities *using factory-approved methods* for all Walker lifting equipment. Each branch is equipped with all necessary factory-developed tools and testing equipment to do a thorough and satisfactory reconditioning job—backed up by a new jack guarantee. Large stocks of genuine factory repair parts are maintained at all times to assure prompt, efficient service at standardized factory charges. No comparable factory-owned and operated service facilities are provided by any other manufacturer of lifting equipment—another proof that "Walker Leads in Jacks."

OUTSTANDING ADVANTAGES OF WALKER OWNED AND OPERATED FACTORY BRANCH SERVICE

- Factory-trained service mechanics
- Factory-developed repair tools
- Genuine factory repair parts
- Complete testing equipment
- Special cleaning and painting facilities
- Thorough reconditioning
- New jack guarantee
- Standard factory charges
- Prompt, efficient service

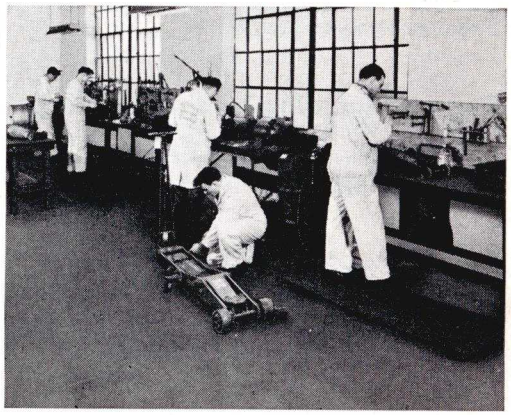

WALKER DIRECT FACTORY SERVICE BRANCHES

Are Located in the Following Cities:

Atlanta, Georgia • Cleveland, Ohio • N. Kansas City, Missouri • Chicago, Illinois
Dallas, Texas • Long Island City, New York • Philadelphia, Pennsylvania

Authorized Walker Service Stations in the Following Principal Cities:

Boston • Denver • Los Angeles • Minneapolis • Portland • Salt Lake City
San Francisco • Syracuse • Toronto • Winnipeg

WALKER MANUFACTURING CO. OF WIS., RACINE, WIS.

Also Makers of WALKER EXHAUST SILENCERS ELECTRIC LIFTS • OIL FILTERS

FORM NO. J-49
PRINTED IN U.S.A.
50M-649-W